CONFIDENTIAL B

MT6765 Thermal Design Notice

2017/11

Revision History

Version	Date	Description	Author
V0.1	2017.11	Initial release	Bruce Yeh

Contents

- Thermal Strategy on MT6765
- MT6765 Thermal Target for Phone Design
- Thermal consideration on MT6765 : NTC
- Thermal design check on MT6765
- Supplementary Information

Thermal Strategy on MT6765

- To achieve MT6765 platform performance, we suggest refer to MediaTek's thermal strategy for thermal solution design.
- For slim phone design (phone thickness **< 10mm**) or lower phone surface temperature, the hot spot on the phone surface is obvious. **Apply heat spreader material (Cu foil or graphite)**on the back cover or mid-frame to make thermal mitigation for uniform temperature distribution.
- The package type of MT6765 is FCBGA. It is the good way to lead heat transfer on the **top of the package** .
  - Solution 1: Adding **T**hermal **I**nterface **M**aterial between the top of package and shielding case. (recommended)
  - Solution 2: Use metal-frame for phone structure design. (recommended)
  - Solution 3: Make sure AP and metal-frame are in the same side.
- PCB size is a key factor for thermal performance. PCB size > **2,600mm^2** is recommended.
- If the material of mid-frame is stainless, attach copper foil on the stainless side to improve in-plan thermal performance.

Thermal Strategy on MT6765

- Analysis on heat transfer path – top side
  - **T**hermal **I**nterface **M**aterial is between the top of package and shielding case.
  - Shielding case applies spreader-type for design.
  - Make thermal conduct to metal frame the heat transfer path.
    - Mg-Al for metal-frame is recommended.
    - If mid-frame is stainless, **add copper foil** to improve in-plan thermal performance and make uniform temperature distribution.
- Analysis on heat transfer path – bottom side
  - Adding heat spreader material on back cover to make thermal mitigation.

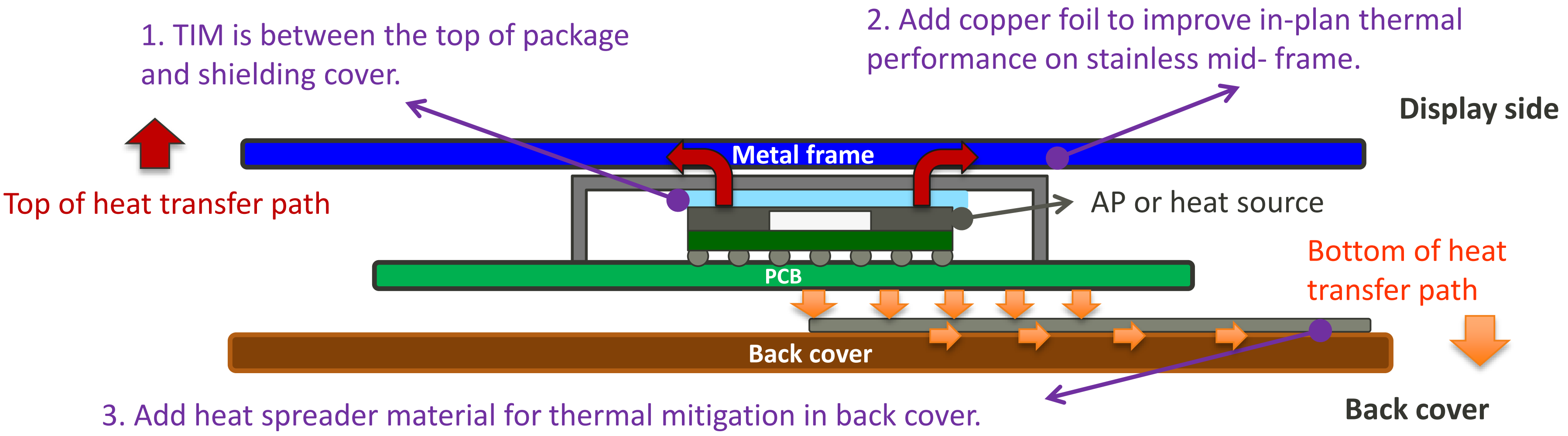

Thermal Consideration on MT6765- NTC

- APNTC & PANTC design on MT6765
  - AP NTC should be designed on MT6765 platform. It relates to AP SW algorithm behavior. To make AP run performance mode in lower board temperature:
    - Keep AP NTC location far from other heat sources (e.g. PMIC, PA, Wi-Fi, charger) for at least 10mm.
    - Keep **6mm~8mm** distance near AP edge and locate it in the same layer with AP.
  - PA NTC monitors PA temperature. It's for modem throttling trigger condition. Make it close to PA.
  - Make C1502, C1503 (0201C/1μF) be close to MT6765

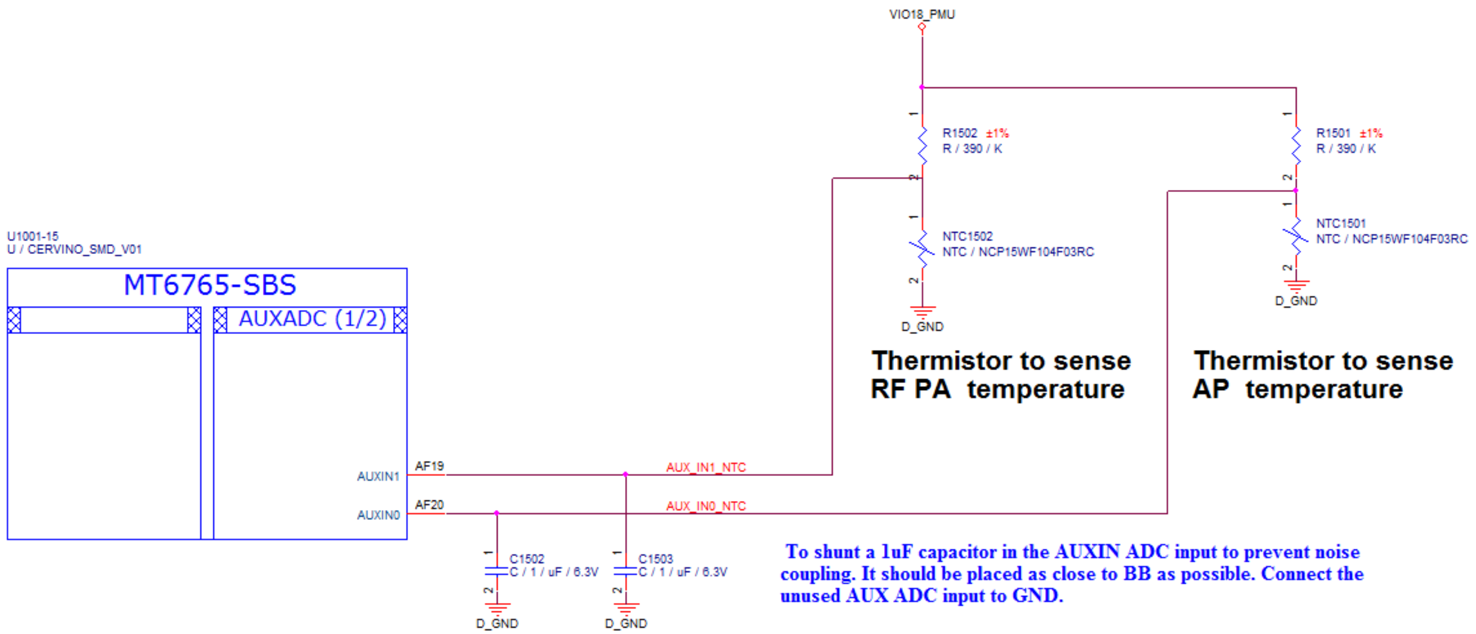

MEDIATEK

Thermal Consideration on MT6765- NTC

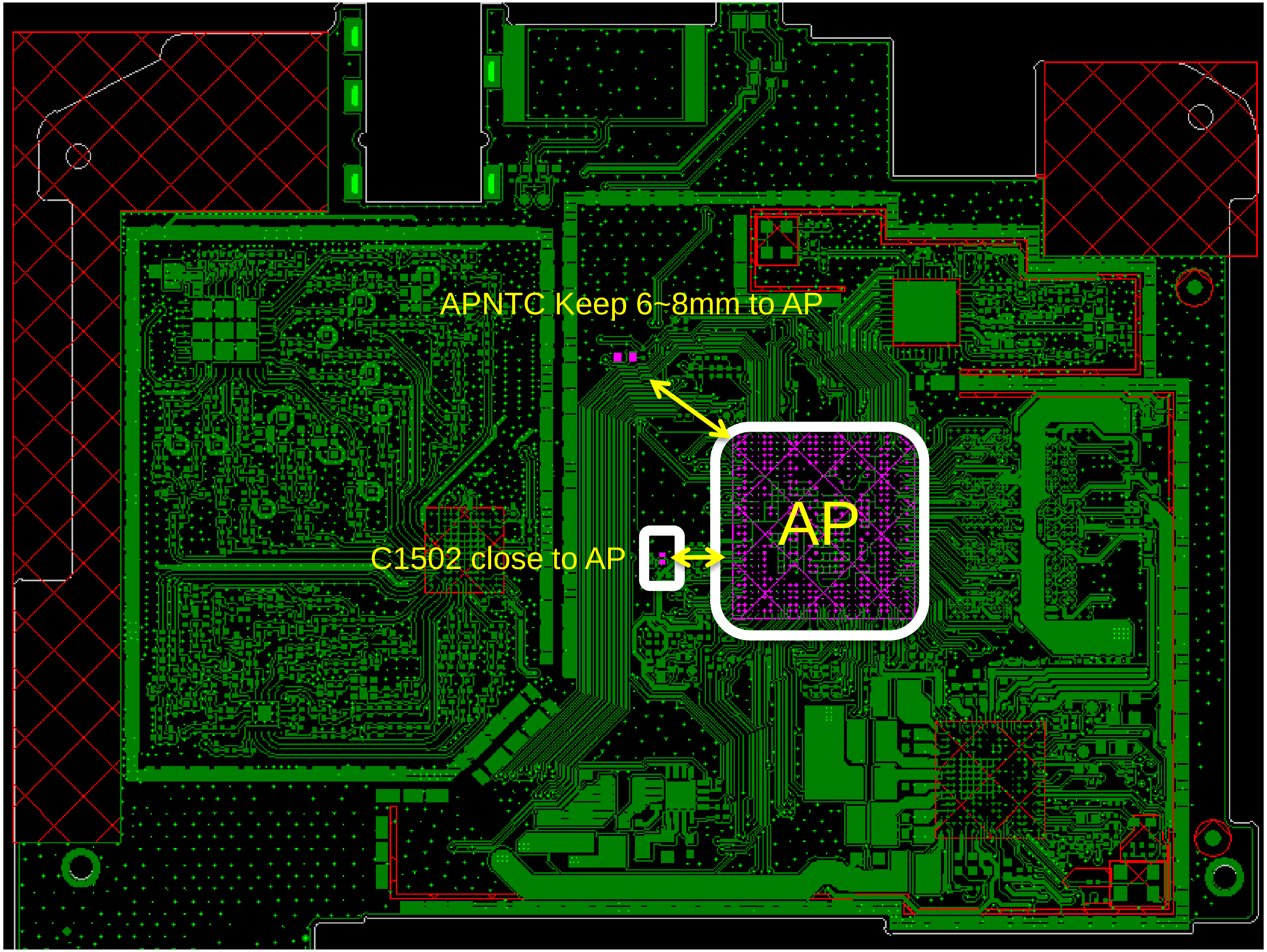

Thermal Design Check on MT6765

- Check list for MT6765
  - Items listed in bold can obviously affect AP performance.

Main thermal solution on MT6765	PCB area large than 2,600mm^2	Recommended *1
	AP locates in PCB central position and between PCB and mid-frame.	**Must**
	TIM between the top of AP and shielding case	**Must**
	TIM between the top of PMIC and shielding case	Recommended
	High thermal conductivity applies k>3w/m-k.	Recommended
	Metal frame is applied for design (Al-Mg frame).	Recommended
	Heat spreader material (Cu foil or graphite)on back cover	**Must**
	Thermal solution or design for camera module (>16M)	Recommended
PCB placement	**Make sure AP, PA NTC design in**	**Must**
	Keep AP far from PMIC, modem RF, modem PA, Wi-Fi >10mm	Recommended
	Keep charger far from AP >10mm; Keep charger far from **NTC > 20mm**	**Must**
	Keep AP far from PCB hollow >10mm	Recommended
	Each chip is not overlapped in two sides.	Recommended
	Keep high current charger far from each chip > 15mm	Recommended

***1. If the PCB area cannot be larger than MediaTek's suggestion, apply more HW thermal solution in the design.**

Supplementary Information

- The following documents are also provided as supplementary information.
  - **MediaTek**手機熱測試規範 (in Mandarin)
    - Defines MediatTek suggested thermal test items, test environment and test methods.
  - **General Thermal Considerations for Smartphone**
    - Thermal considerations for mechanical design
    - Thermal considerations for components
    - Thermal mitigation solution
  - **TIM_Application_Notices_V1**
    - Explains how to apply TIM on smart phones.
  - Download link
    - MediaTek DCC > Document Tree > HW > Common Design Notes > Thermal > Common

MEDIATEK

everyday genius

Copyright © MediaTek Inc. All rights reserved.